# Triad Mini 3D Hinge



## MINI 3D HINGE - DIMENSIONS

**Standard Mini 3D Hinge**

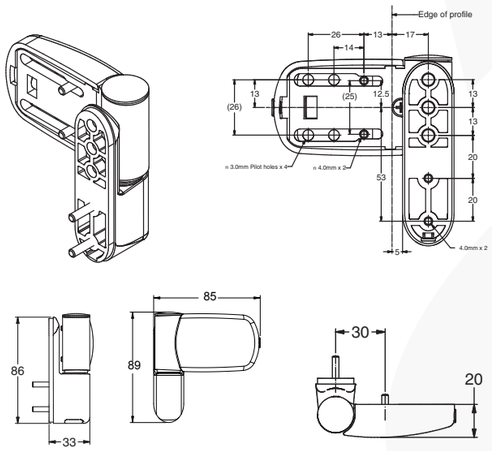


**Synseal Type Mini 3D Hinge**

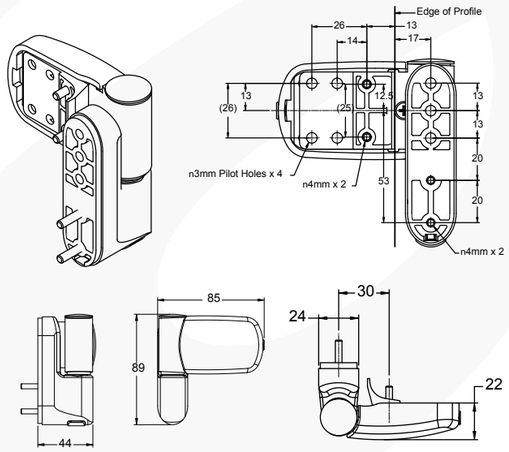


| PRODUCT CODES | | |
|---|---|---|
| SYNSEAL VARIANT (ADD ONE OPTION TO THE BEGINNING OF THE CODE) | STANDARD | FINISH |
| SY3D | MT3D | WH |
| SY3D | MT3D | BL |
| SY3D | MT3D | BR |
| SY3D | MT3D | C |
| SY3D | MT3D | CG |
| SY3D | MT3D | CH |

i.e: MT3DWH = White, Mini 3D Hinge
SY3DWH = White, Synseal Type Mini 3D Hinge

### Key to product codes

**Finish:**
WH - White
BL - Black
BR - Brown
C - Caramel
CH - Chrome
CG - Champagne Gold
FL - Flint

### Parts List

1). Hinge Body
2). Body Sleeve
3). Straight Pin
4). Adjustment Screw
**5). Bottom Cover Cap (XX3DHINGE009)**
6). Hinge Leaf
7). Leaf Sleeve
**8). Top Cover Cap (XX3DHINGE008)**
9). Pin 2
10). Hinge Leaf Cover
**11). Screw Hole Cover (XX3DHINGE011)**
12). Screw - CSK, M4 x 12mm
**13). Leaf Cover Cap (XX3DHINGE013)**
**14). 1mm Shim (XX3DHINGE015)**
**5mm Shim (XX3DHINGE037)**
**15). Shoe Cover (XX3DHINGE016)**

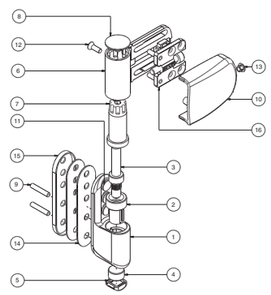

**The parts marked in bold can be ordered as spare/replacement items**

**XX to be replaced with coating Prefix as listed opposite,**
**i.e. WH3DHINGE015 = White 1mm Shim for MT 3D Hinge**

*Contact your Avocet Sales Advisor for more information*

- Market leading aesthetically pleasing 3D Hinge
- 3 way adjustment combining product excellence with ease of fabrication
- Hinge to suit rebate heights 12-16mm+ (19mm with packers)
- Simple allen key adjustment enables door movement to be compensated for without the need of an installation engineer
- Available in White, Black, Brown, Caramel, Champagne Gold, Chrome & Flint

## Technical Information

### Assessment Data

**Performance:** Endurance tested to 100,000 operations,

Load tested to 100kg on 3 hinges

**Corrosion resistance:** All finishes meet the requirements of BS EN 1670:2007 - grade 5 (500 hrs Salt Spray)

### Material Specifications

**Hinge leaf, plate & body:** Zinc Alloy BS1004A

**Top/Bottom Nylon Bush:** Nylon 6

**Screws & Pins:** Stainless Steel

**Powder Coating:** White, Black, Brown & Caramel, 60 microns min coating thickness

**PVD/Chrome Coating:** Champagne Gold/Chrome/Flint, multiple layer plating process

### Additional Information

**Multipacks:** Packs of 24 available in HET variant (Add MP to end of code)

**JIG:** MTJIG

**Box Quantity:** Outer Box: 20, Packaged Single



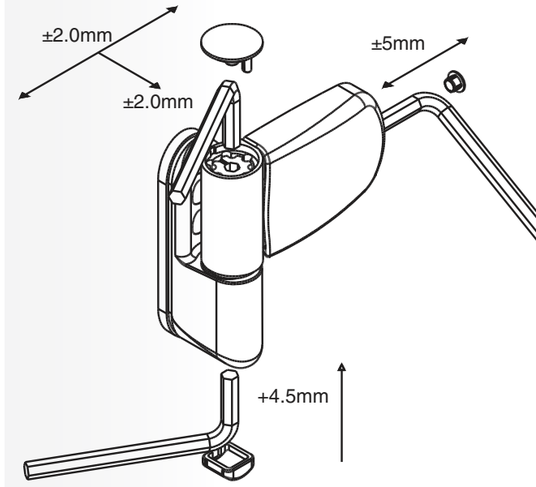






500 SALT SPRAY GUARANTEE

10 YEAR MECHANICAL GUARANTEE